Quality control of tablets

Physical examinations

Quality control of tablets

1. **Macroscopic exam., weight, geometry**
2. **Physical examinations**
3. **Assay (chemical examinations)**
4. **Biopharmaceutical examinations**

Not included in the lecture, but important!

- Flowability

Examinations according to Ph. Eur.

- Weight uniformity
- Content (API) uniformity
- Disintegration
- Hardness
- Friability
- Splitability
- Dissolution

Investigaton of tablets

Macroscopic investigation of tablets

Surface - normal,
- Gloss / matt
- Color series

Geometry – diameter , height, width,
curve geometry

Investigaton of tablets

Uniformity of mass of single-dose preparations
Average mass of tablets

Weigh individually **20** units taken at random or, for single-dose preparations presented in individual containers, the contents of 20 units, and determine the average mass.
Not more than 2 of the individual masses deviate from the average mass by more than the percentage deviation shown in Table and none deviates by more than twice that percentage.

Pharmaceutical Form	Average Mass	Percentage deviation
Tablets (noncoated and coated)	80mg or less	10
	more than 80mg and less than 250mg	7.5
	more than 250mg	5

Investigaton of tablets

Surface

Pore system formed by pressing

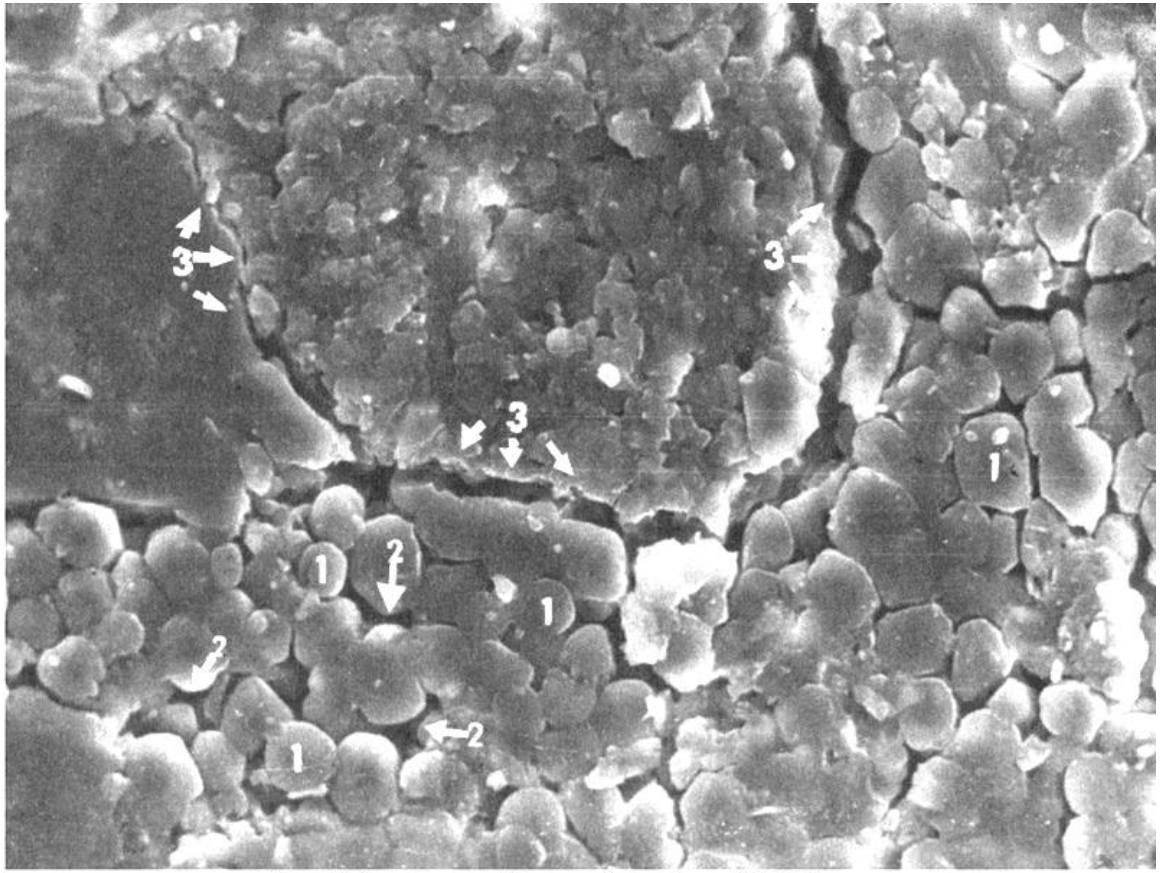

Prednizolon tabletta felszíne (SEM)
Préserő: 20 kN, műszeres nagyítás: 400x

Investigaton of tablets

Surface

Pore system formed by pressing

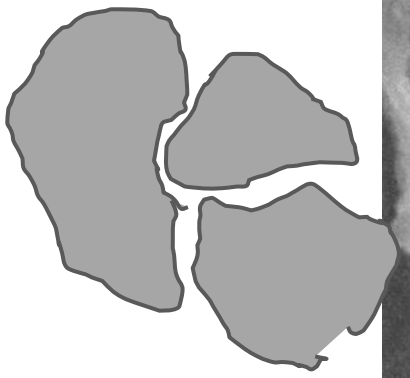

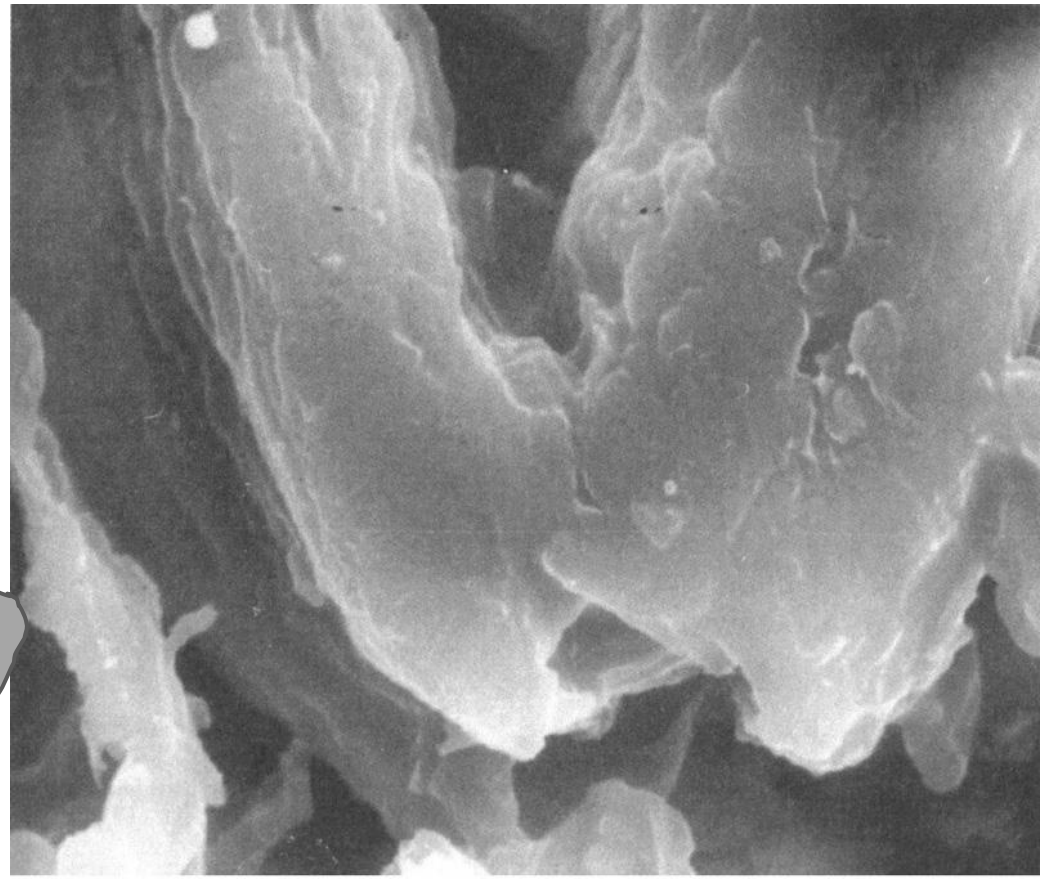

Avicel PH 101 préselmény felszíne (SEM)
Préserő: 3 kN, műszeres nagyítás: 5000x

Investigaton of tablets

Resistance to crushing of tablets

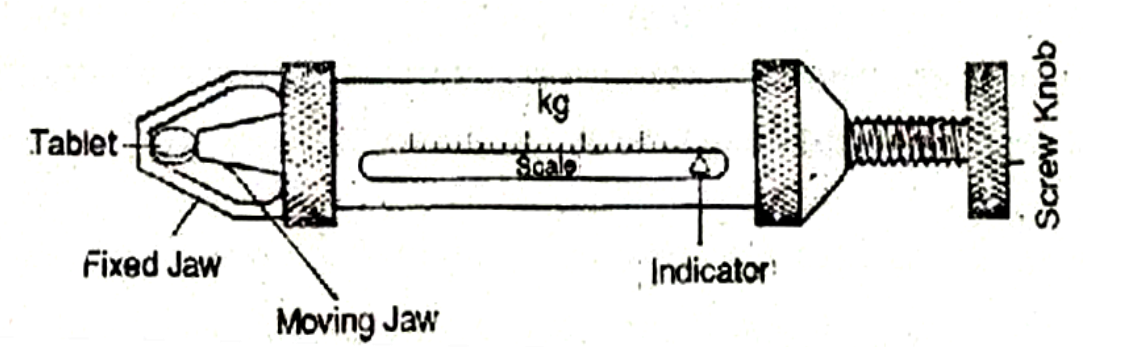

hand operated

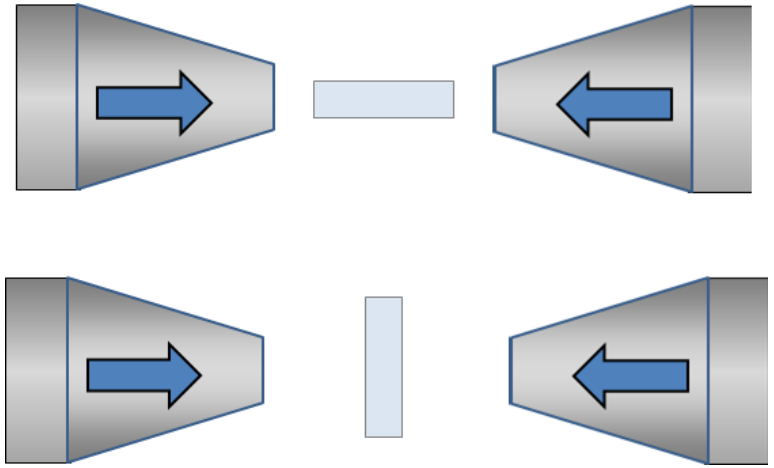

Modern testers employ mechanical drives, strain gauge–based load cells for force measurements, and electronic signal processing, and therefore are preferred.

Investigaton of tablets

Resistance to crushing of tablets

This test is intended to determine, under defined conditions, the resistance to crushing of tablets, measured by the force needed to disrupt them by crushing.
The apparatus consists of 2 jaws facing each other, one of which moves towards the other. The flat surfaces of the jaws are perpendicular to the direction of movement.

Place the tablet between the jaws, taking into account, where applicable, the shape, the break-mark and the inscription; for each measurement orient the tablet in the same way with respect to the direction of application of the force. Carry out the measurement on 10 tablets, taking care that all fragments of tablets have been removed before each determination.
Express the results as the mean, SD, minimum and maximum values of the forces measured, all expressed in newtons.


02 H
0056
ERWEKA

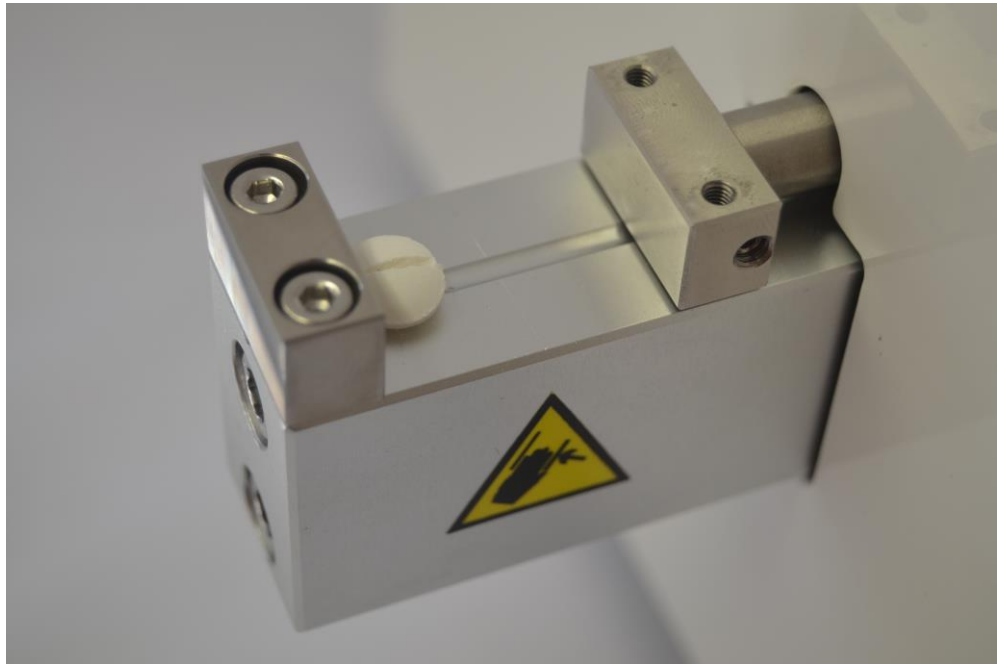


HARDNESS-TESTER
0
5
10
15
20KG

Investigaton of tablets

Tablet friability investigation

This test is intended to determine, under defined conditions, the friability of uncoated tablets, the phenomenon whereby tablet surfaces are damaged and/or show evidence of lamination or breakage when subjected to mechanical shock or attrition.

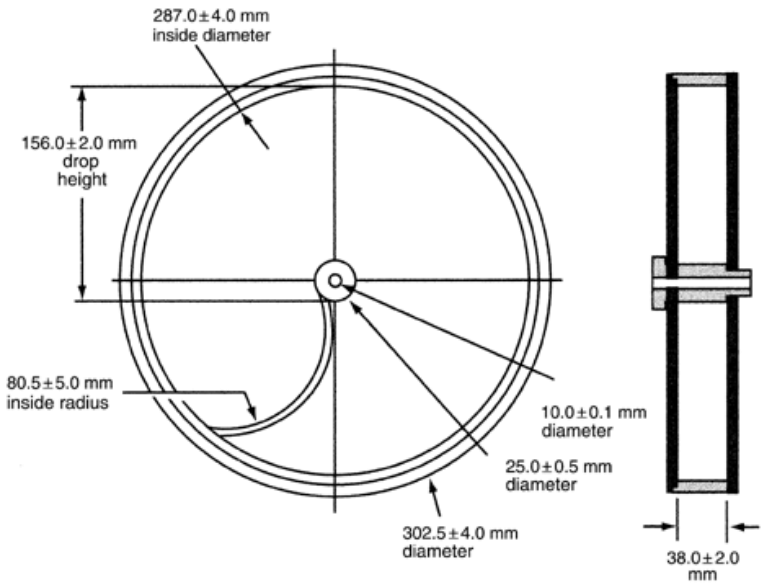

The drum is attached to the horizontal axis of a device that **rotates at 25 ± 1 r/min for 4 minutes.**

Thus, at each turn the tablets roll or slide and fall onto the drum wall or onto each other.

A maximum loss of 1 per cent of the mass of the tablets tested is considered to

be acceptable for most products

Friability / abrasion test

x < 0,65 g 20 pcs
x > 0,65 g 10 pcs

Weight loss allowed: 1%

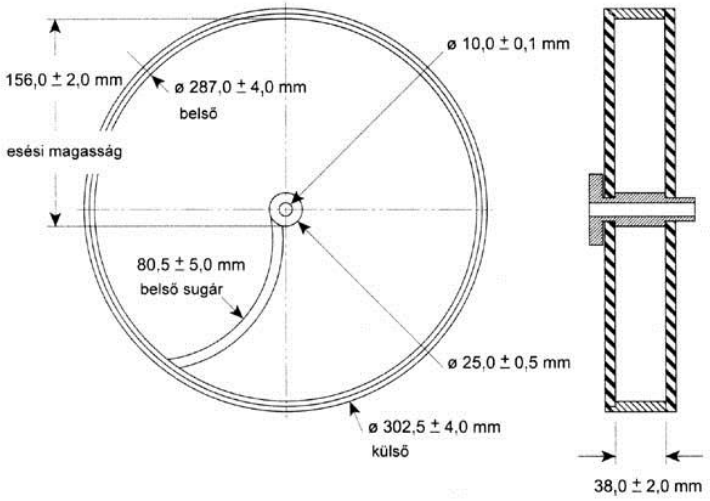


PAGRITE
TEST


PHARMA TEST
Enter
Fn
Delete
Esc
1
2
3
4
5
6

Multicheck

Quality control of tablets

Assay

Institute of Pharmaceutical Technology and Biopharmacy
University of Pécs
University of Pécs

Investigaton of tablets

Content uniformity

Method. Using a suitable analytical method, determine the individual contents of active substance(s) of **10 dosage units** taken at random.
Tablets complies with the test if each individual content is **±15** per cent of the average content. The preparation fails to comply with the test if more than one individual content is outside these limits or if one individual content is outside the limits of ±**25** per cent of the average content.

Investigaton of tablets

Stability

The issue later in

Quality control of tablets

Biopharmaceutical examinations

Institute of Pharmaceutical Technology and Biopharmacy
University of Pécs

Investigaton of tablets

Disintegration test

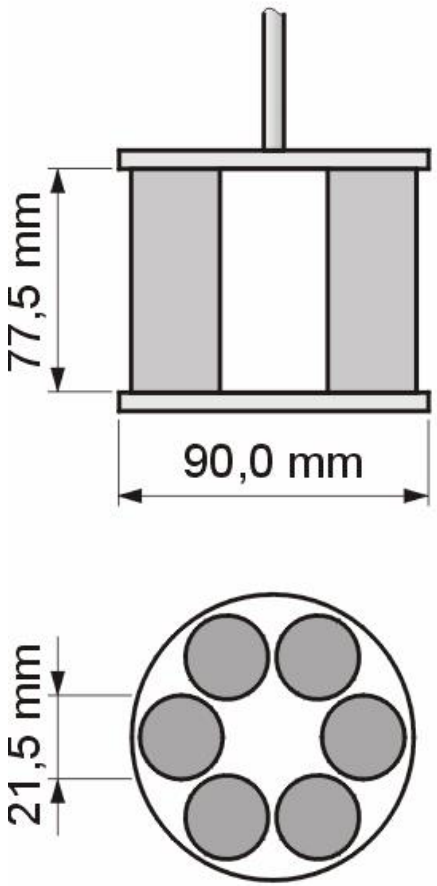

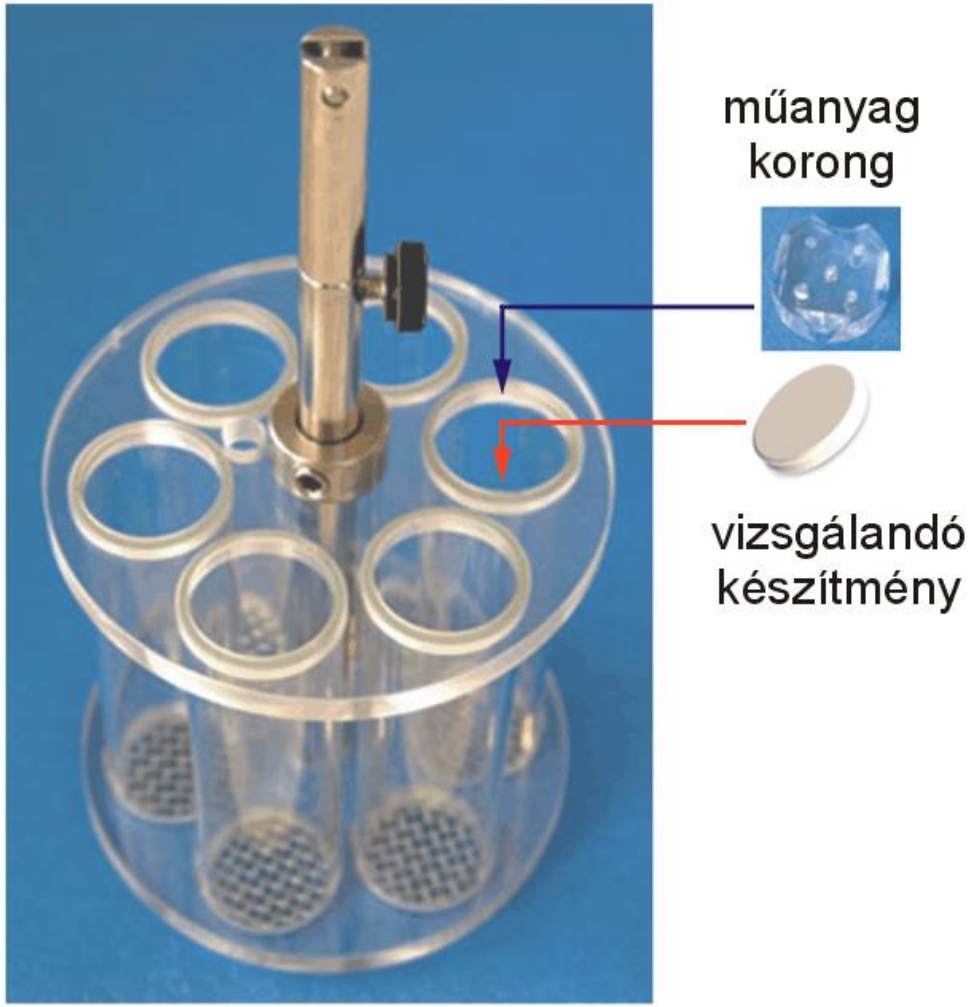

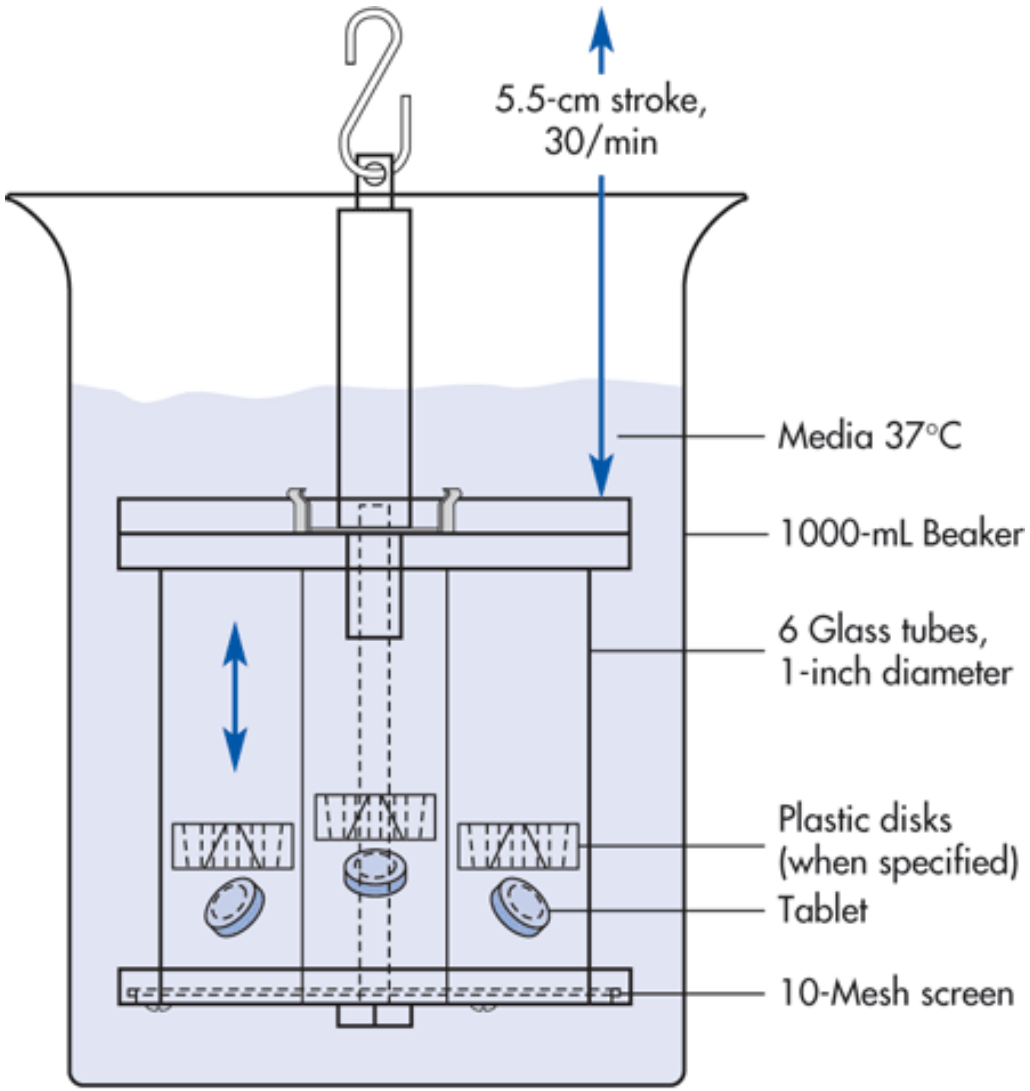

Source: Shargel L, Wu-Pong S, Yu ABC: *Applied Biopharmaceutics & Pharmacokinetics, 6th Edition*: www.accesspharmacy.com


PHARMA
TEST
PHARMA
TEST

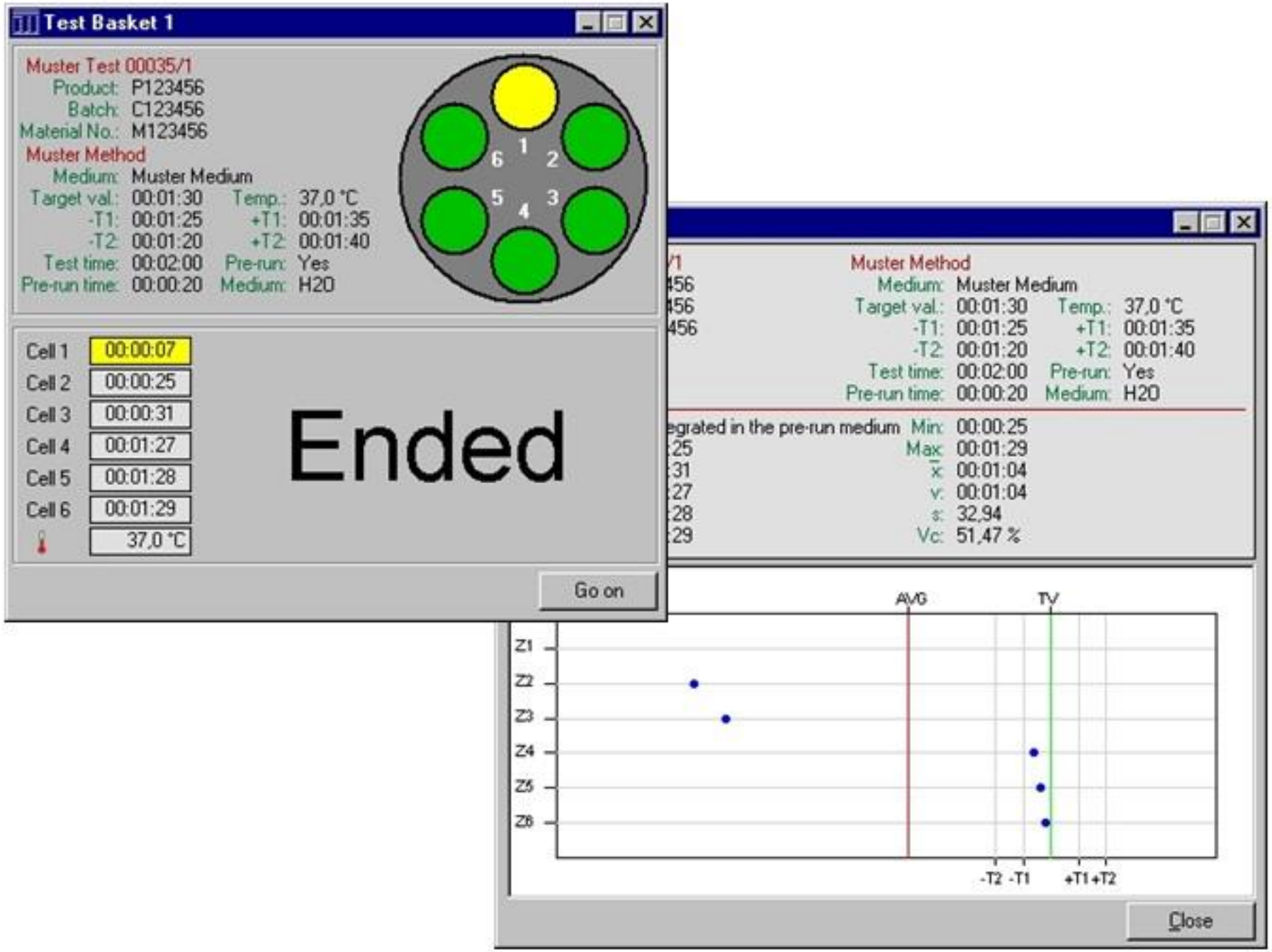
Test Basket 1
Muster Test 00035/1
Product: P123456
Batch: C123456
Material No.: M123456
Muster Method
Medium: Muster Medium
Target val.: 00:01:30 Temp.: 37,0 °C
-T1: 00:01:25 +T1: 00:01:35
-T2: 00:01:20 +T2: 00:01:40
Test time: 00:02:00 Pre-run: Yes
Pre-run time: 00:00:20 Medium: H2O
1
2
3
4
5
6
Cell 1 00:00:07
Cell 2 00:00:25
Cell 3 00:00:31
Cell 4 00:01:27
Cell 5 00:01:28
Cell 6 00:01:29
37,0 °C
Ended
Go on
Muster Method
Medium: Muster Medium
Target val.: 00:01:30 Temp.: 37,0 °C
-T1: 00:01:25 +T1: 00:01:35
-T2: 00:01:20 +T2: 00:01:40
Test time: 00:02:00 Pre-run: Yes
Pre-run time: 00:00:20 Medium: H2O
Min: 00:00:25
Max: 00:01:29
x̄: 00:01:04
v: 00:01:04
s: 32,94
Vc: 51,47 %
AVG
TV
Z1
Z2
Z3
Z4
Z5
Z6
-T2 -T1
+T1 +T2
Close

Investigaton of tablets

Disintegration

The disintegration test determines whether tablets or capsules disintegrate within the prescribed time when placed in a liquid medium.

Disintegration is considered to be achieved when:

a) **no residue** remains on the screen, or

b) **if there is a residue, it consists of a soft mass** having no palpably firm, unmoistened core, or

c) **only fragments** of coating (tablets) or only fragments of shell (capsules) remain on the screen; if a disc has been used (capsules), fragments of shell may adhere to the lower surface of the disc.

To pass the test, all the tablets or capsules must have disintegrated within given time.

Investigaton of tablets

Disintegration

Disintegration time :

conventional tabl.	15 min
tabl. for solution preparation	5 min
buccal tablet	5-30 min
coated tablets	60 min

Test medium: water
artificial gastric,
intestinal juice

Dissolution tests

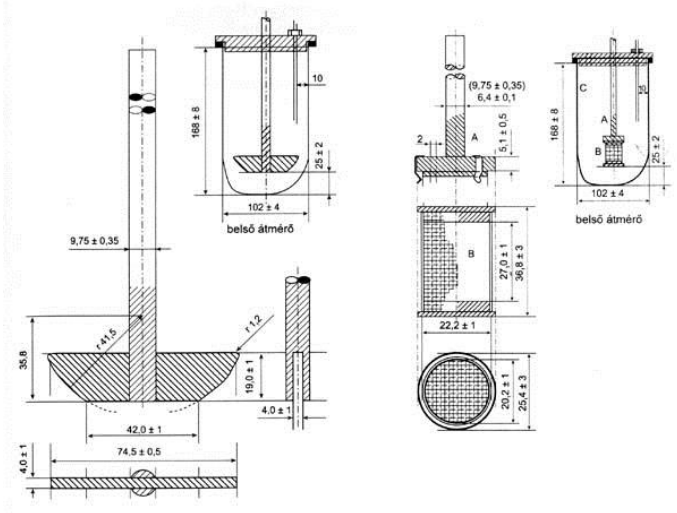

Investigaton of tablets

Dissolution tes

Bascet method

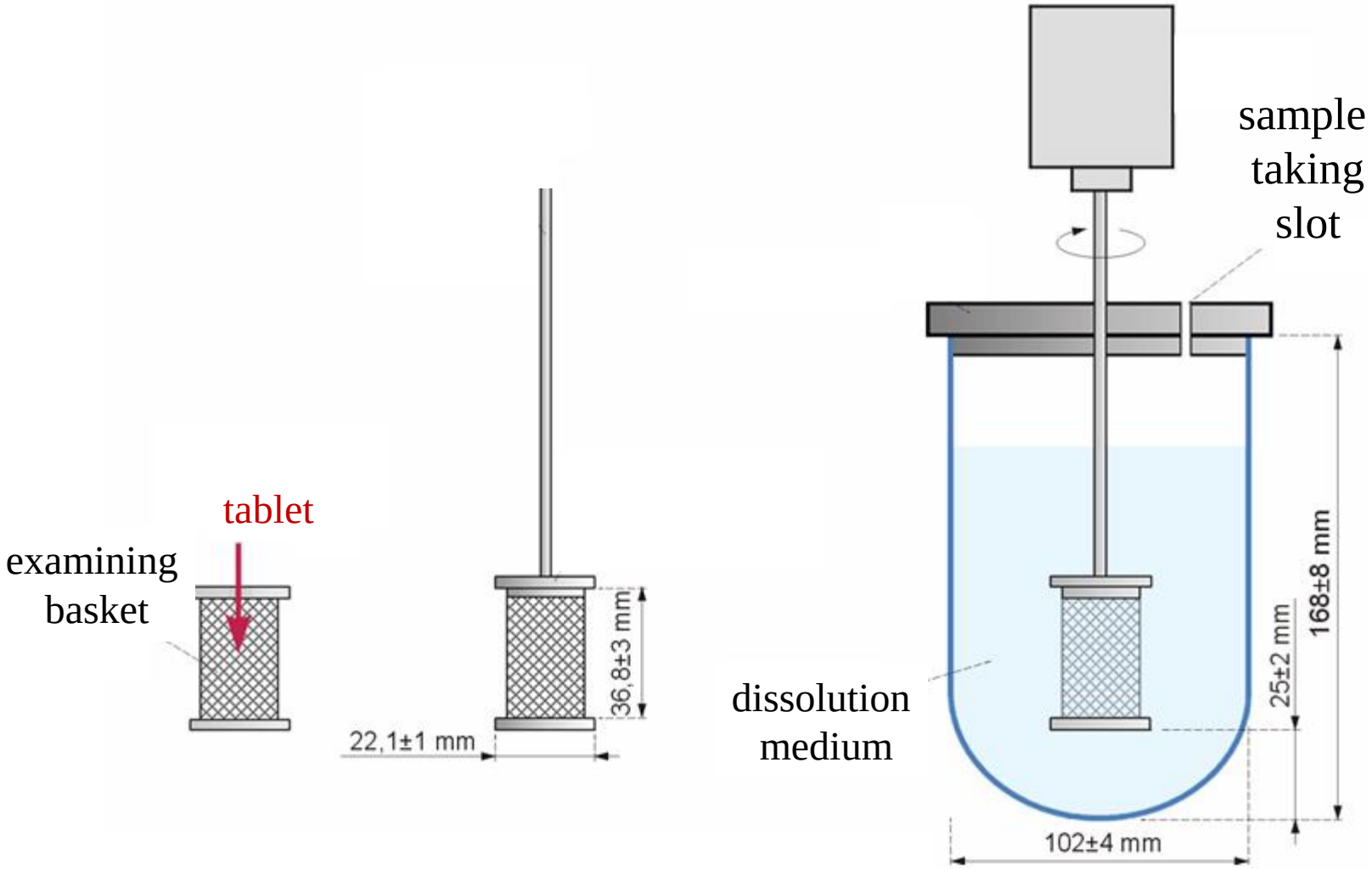

Investigaton of tablets

Dissolution test

Paddle method

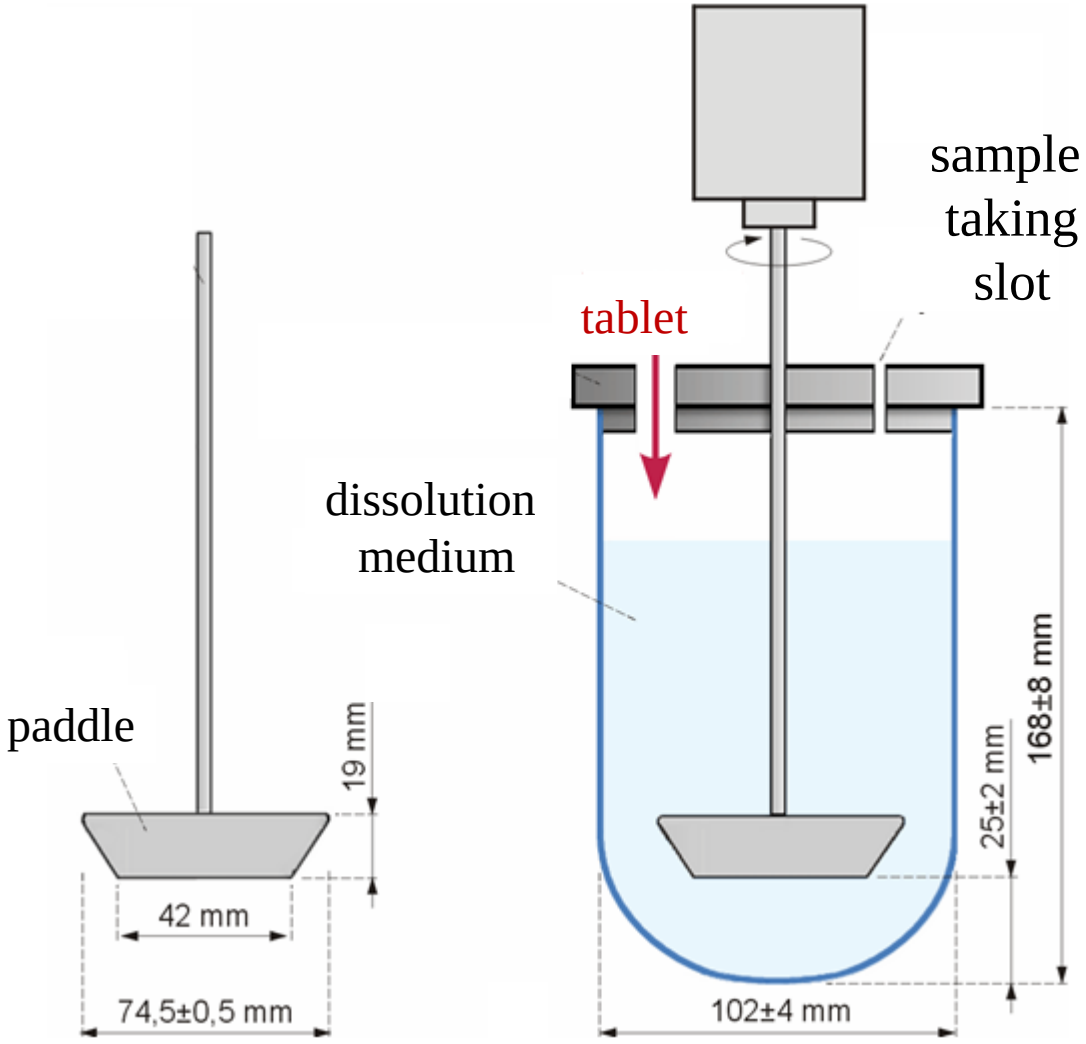

Investigaton of tablets

Dissolution test

Investigaton of tablets

Dissolution test
Flow-through cell

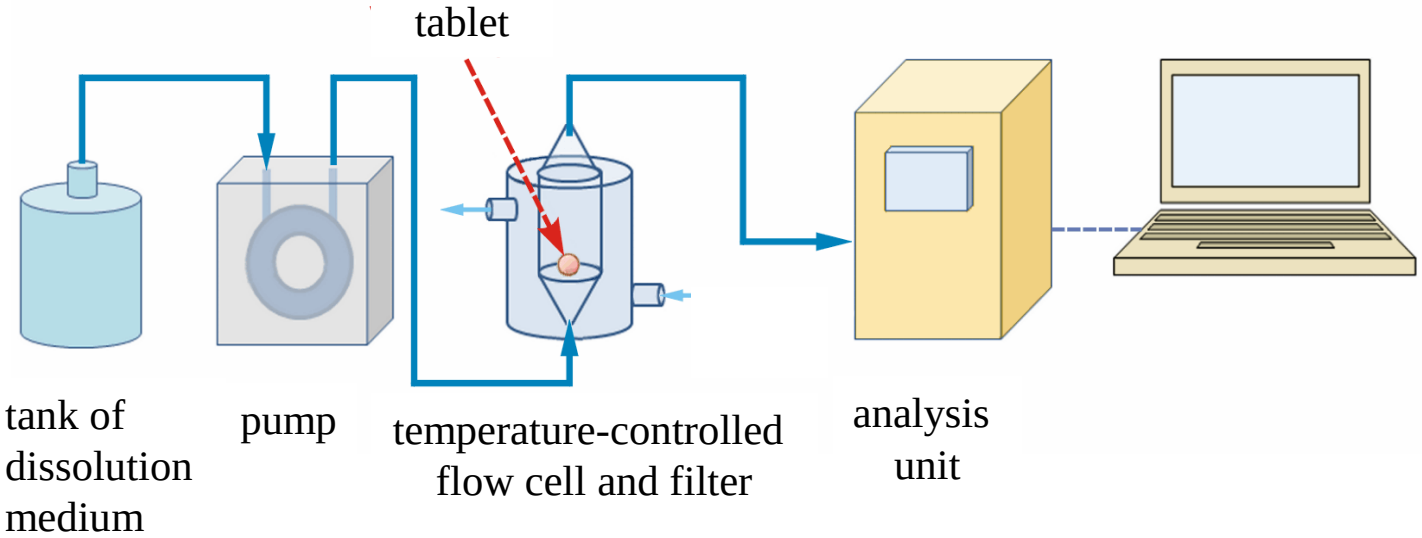

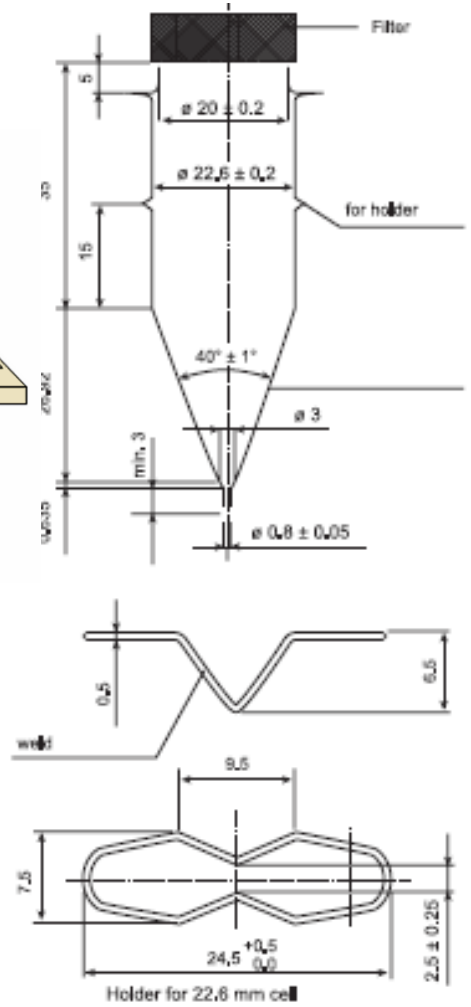

Chewing gum dissolution tester

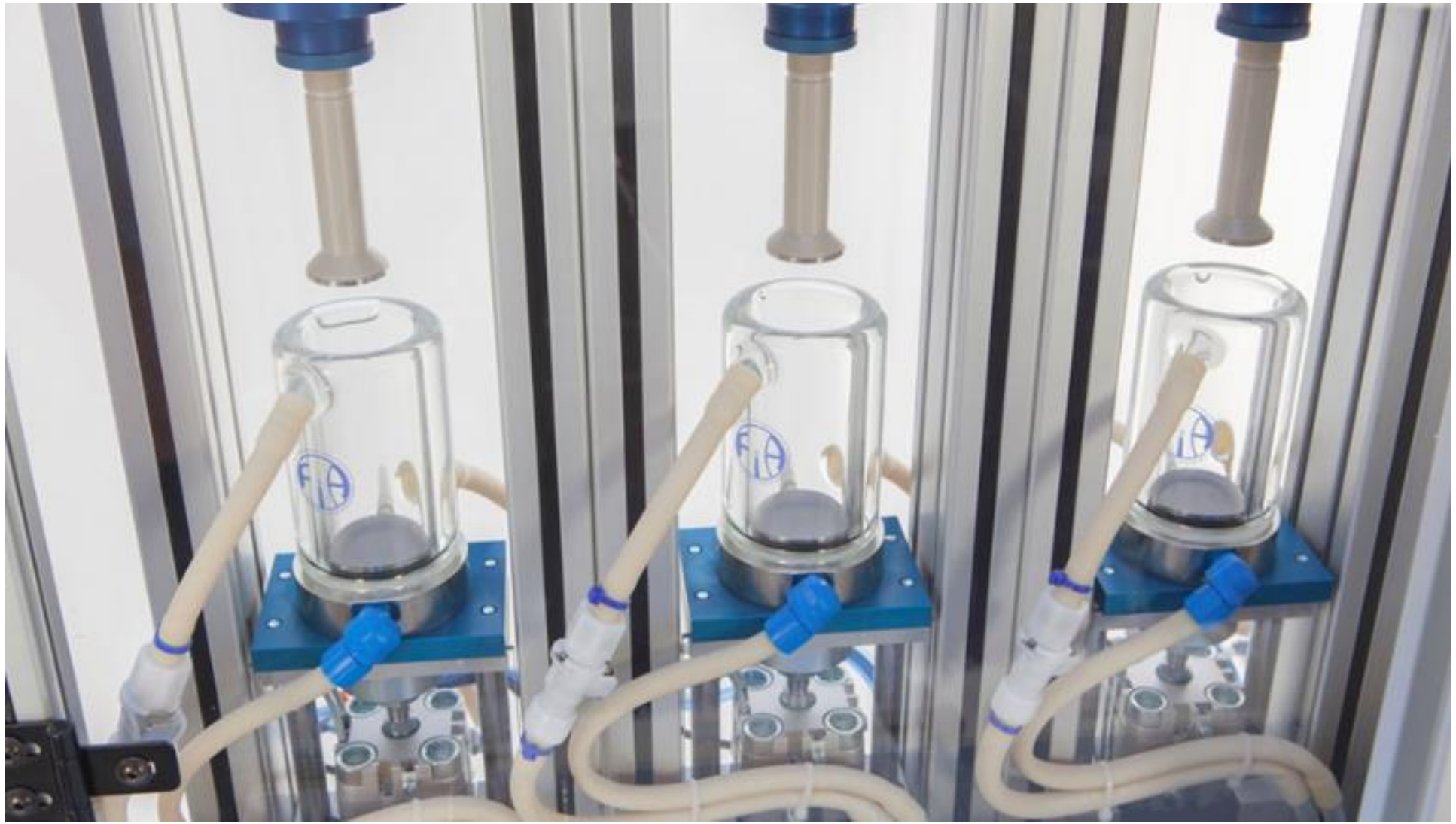

Investigaton of tablets

Dissolution medium

pH	medium
pH 1.0	HCl
pH 1.2	NaCl, HCl
pH 1.5	NaCl, HCl
pH 4.5	phosphate or acetate buffer
pH 5.5 and 5.8	phosphate or acetate buffer
pH 6.8	phosphate buffer
pH 7.2 and 7.5	phosphate buffer

Dissolution test

Increasing the IVIVC correlation

Physiological factors	In vitro factors
pH	Different dissolution media (pH)
GI motility	Stirring conditions
Fat and protein, food interactions	Adding fat or milk
Enzymes	Applying enzymes
Bile	Applying surfactants
GI transit time	pH-gradient tests

Dissolution testers (1,2,3,4)

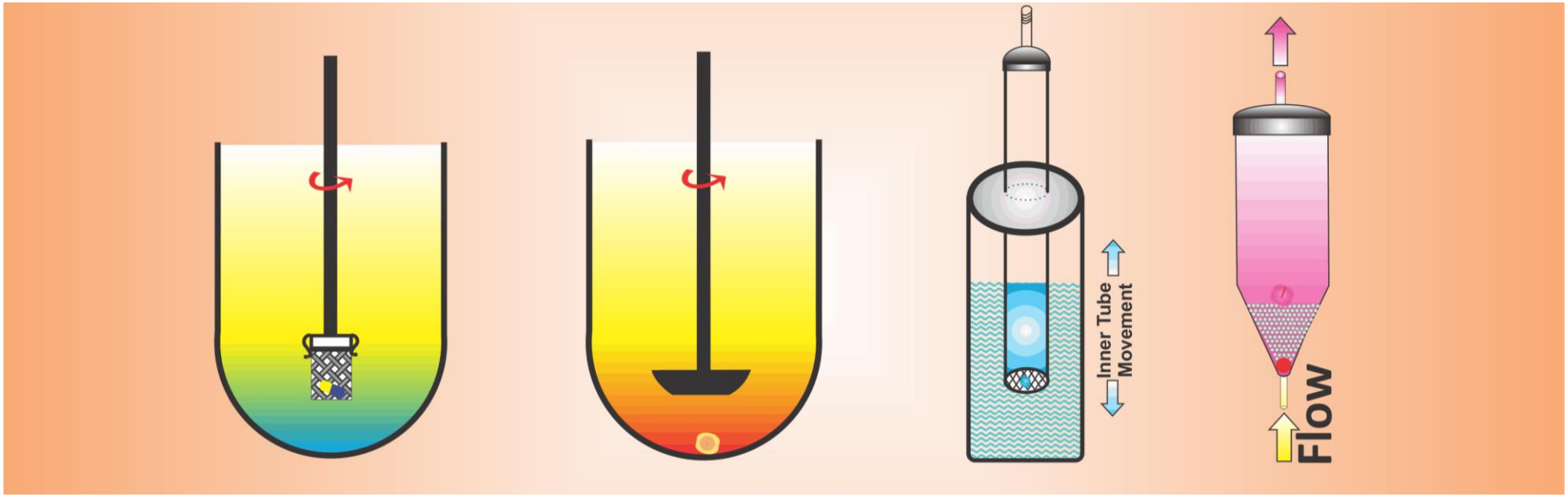

International Conference on Harmonisation (ICH)

- Rotating basket method (50/100 rpm)
- Rotating paddle method (50/75 rpm)
- Sampling time every 15 min, at rapid preparations in every 5-10 min
- Volume: 500 ml, 900 ml, 1000 ml (sink conditions)
- pH=1.2-6.8 (not more than pH=8.0)

Dissolution run

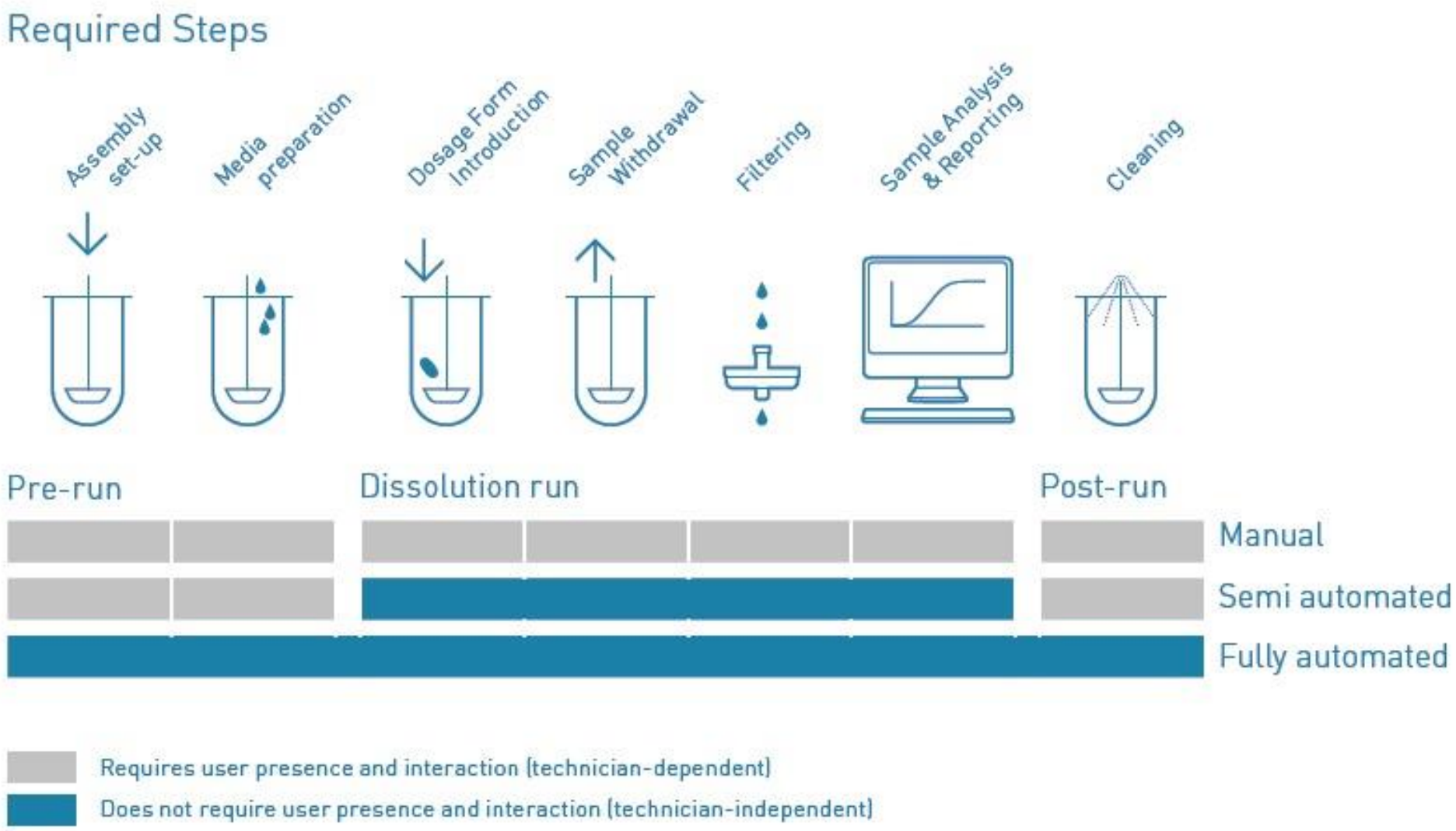

Drug dissolution procedure

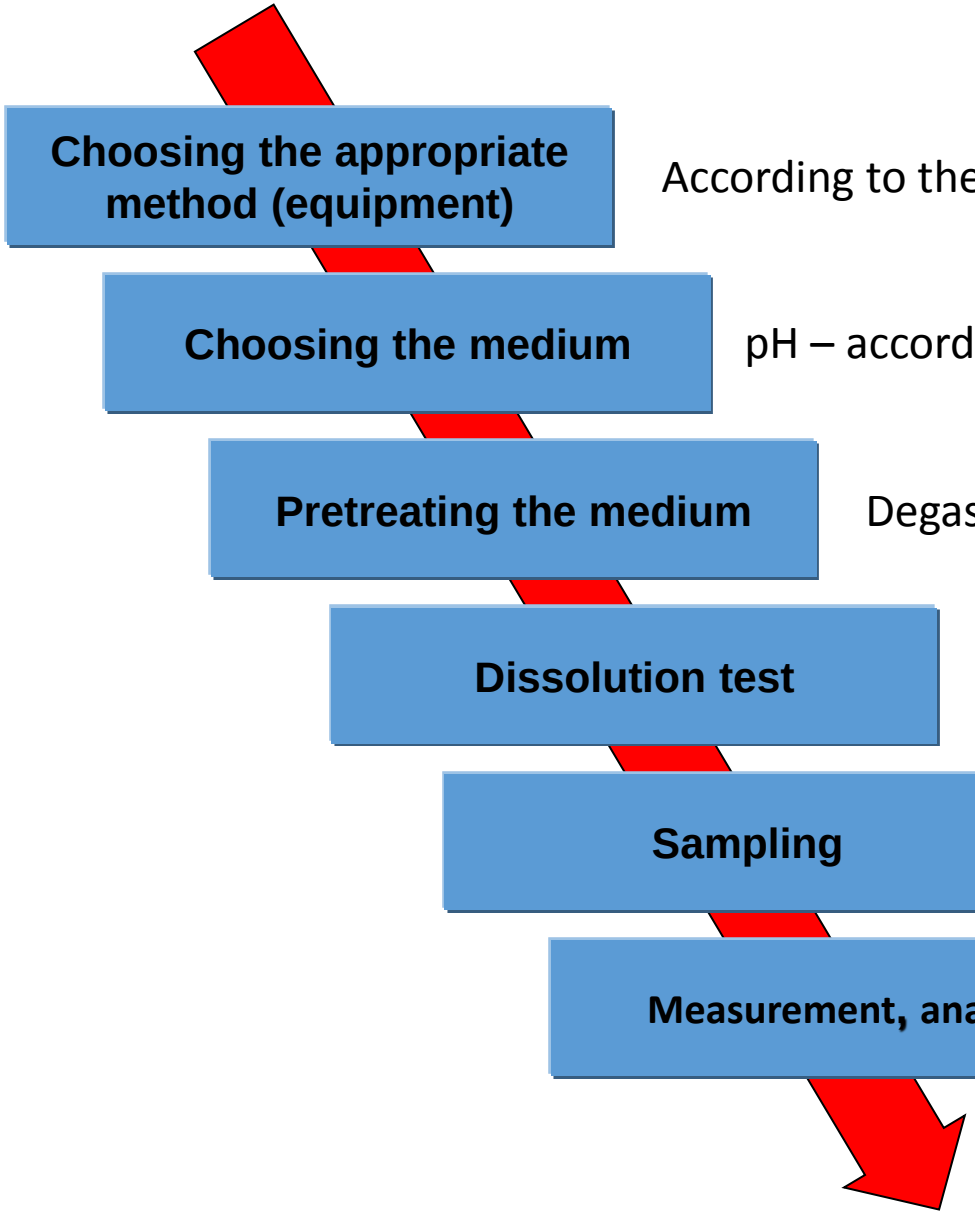

According to the dosage form

pH – according to the desired place of liberation

Degassing

Rotating basket/paddle, flow through cell

Place, time, pretreating the sample (ie.: filtering)

Off-line, on-line (HPLC, UV/VIS)

Transdermal drug dissolution Franz-cell

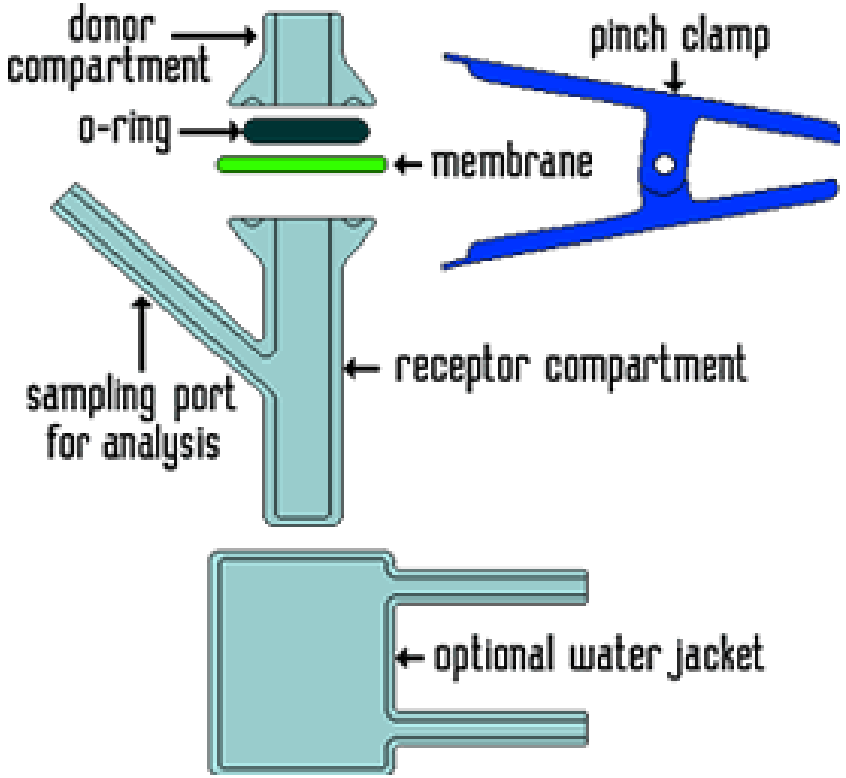

Franz-cell

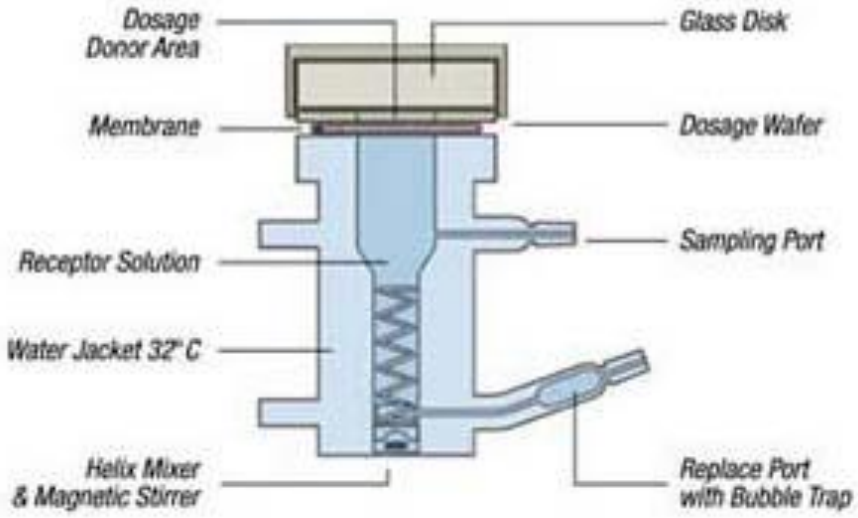
Dosage
Donor Area
Glass Disk
Membrane
Dosage Wafer
Sampling Port
Receptor Solution
Water Jacket 32° C
Helix Mixer
& Magnetic Stirrer
Replace Port
with Bubble Trap

Investigaton of tablets

The liberation requirement

Q = value for a specified period of time released drug as a percentage of the nominal amount of active ingredient.

Traditional sustained-release dosage forms:

if not otherwise specified, the value of Q is 75%.

the drug must dissolve in 75% of 45 minutes.

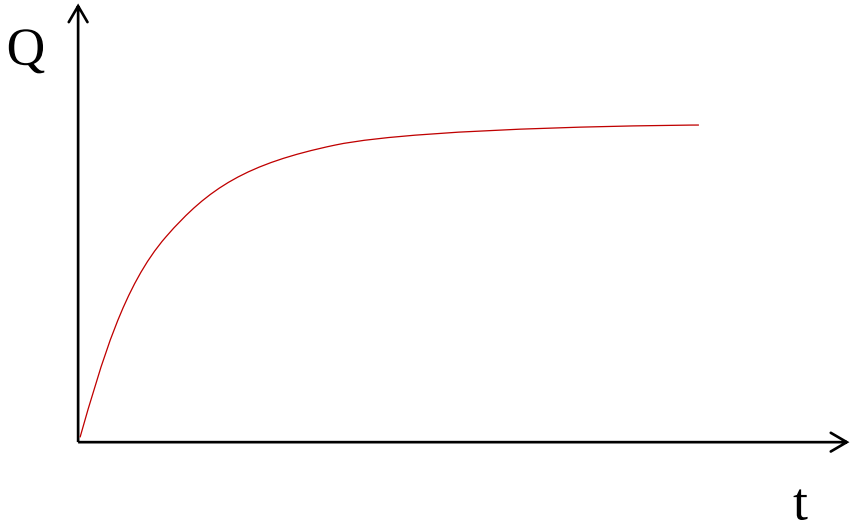

Investigaton of tablets

Dissolution test

The following checklist is offered as an example for the purpose of monitoring the performance of the system. It does not constitute a part of the requirements.

Proposed checklist for performance of the dissolution test

(one sheet per test)

Name of product

International Nonproprietary Name (INN).....

Proprietary Name.....

Date .....

Spectrophotometer	**Verified**	**Further details (values and comments)**
Cleanliness of cells	.....	.....
Description		
Apparatus	.....	.....
Device(s)	.....	.....
- single/multi-spindle (3/6 vessels)	.....	.....
Cleanliness of paddle or basket	.....	.....
Cleanliness of vessel(s)	.....	.....
Dissolution medium (name and composition)	.....	

.....

Tableting mistakes

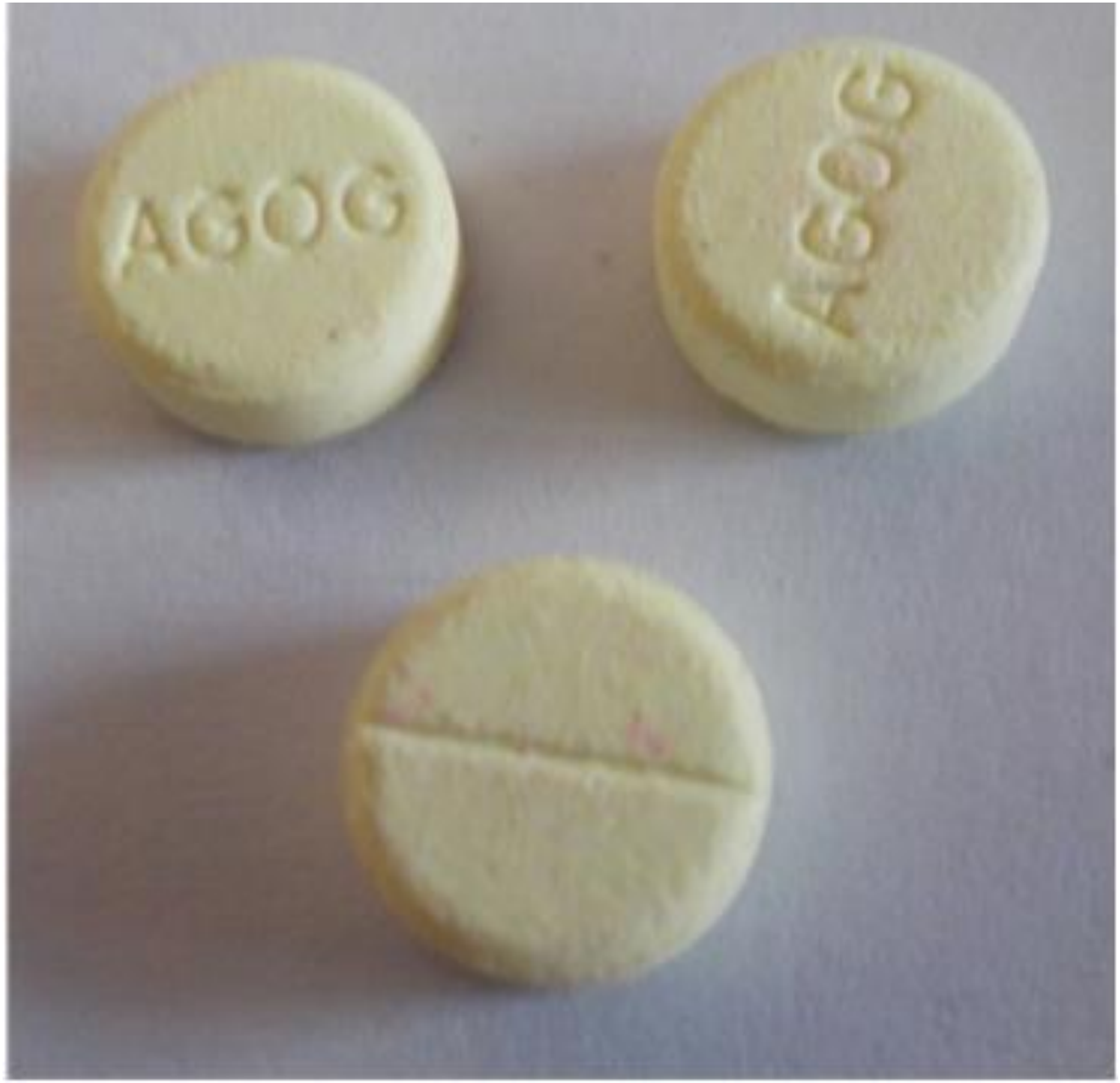
AGOG
AGOG


ASP

Thank you for your attention!